Chemitec
WATER MONITORING SOLUTIONS

SENSORS & CONTROLLERS

ANALYZERS & SAMPLERS

LEVEL, FLOW & PRESSURE

WEB APP & DATALOGGING

ACCESSORIES

S305/M DATASHEET

MODULAR BYPASS SENSOR HOLDER

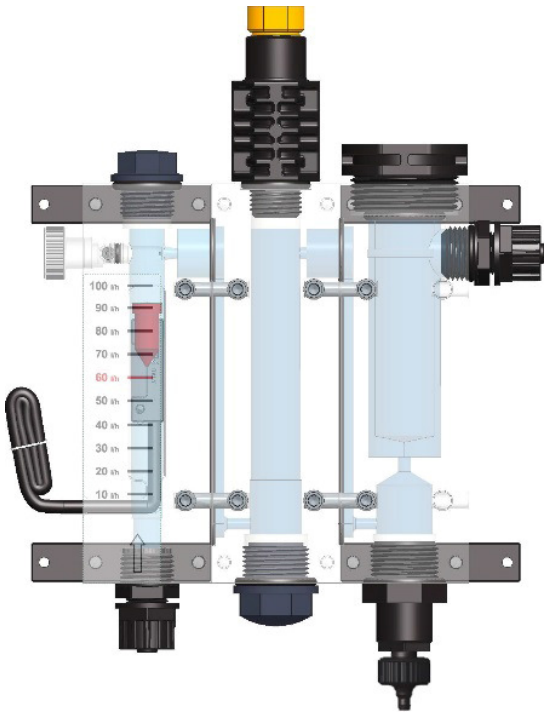

MAIN FEATURES

- Probe holder in PMMA (Black PVC for the turbidity block) plastic material, pressure resistant up to 5 bar at a working temperature of 60 °C (50°C for the turbidity block)
- The modular probe holder that guarantees ultimate flexibility to add modules to meet individual application or installation
- The parts are designed and adapted to the range of available probes guaranteeing perfect chemical measurement in water treatment applications.

AVAILABLE PROBE MODULES

- Flow Switch
- 12 mm diameter (pH/Redox/Cond/Cl_2)
- 24 mm diameter (amperometric probes)
- 36 mm diameter (dissolved oxygen etc)
- PVC Block (turbidity)

CHEMITEC S.R.L.
VIA I.NEWTON, 28 50018 SCANDICCI (FI)- ITALY
+39 0557576801 • sales@chemitec.it • www.chemitec.it

TECHNICAL DATA

Material	PMMA colourless (Black PVC for Turbidity Block)
Sensor adapter	PG 13.5, 24 mm, 36 mm, 42 mm
Process connection	8 x 12 mm (tube)
Process temperature	0 – 60°C (0 – 50°C with turbidity module)
Pressure range	0 – 5 bar
Flow Rate	Range approx. 60 l/h

DIMENSIONS

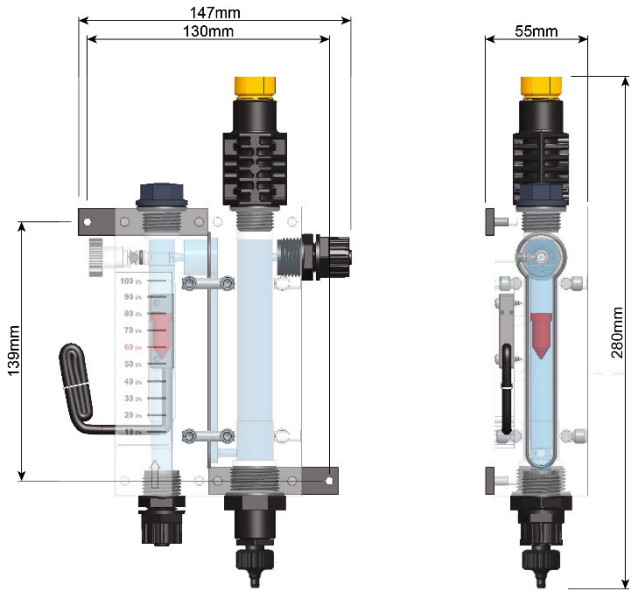

Flow switch + 1 12mm Module

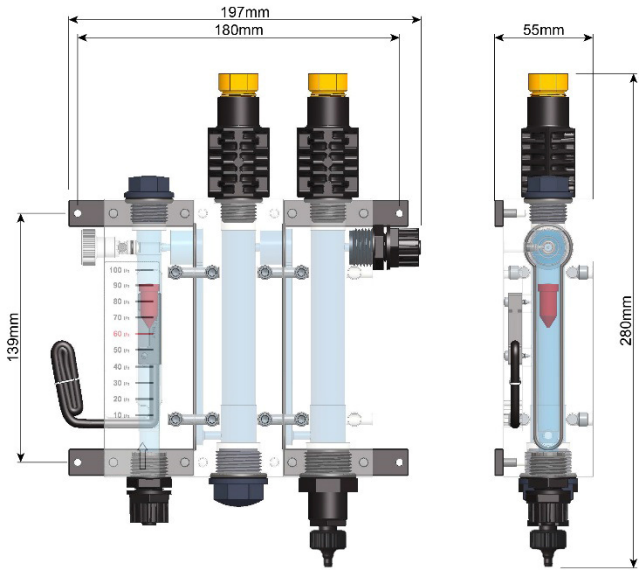

Flow switch + 2 12mm Modules

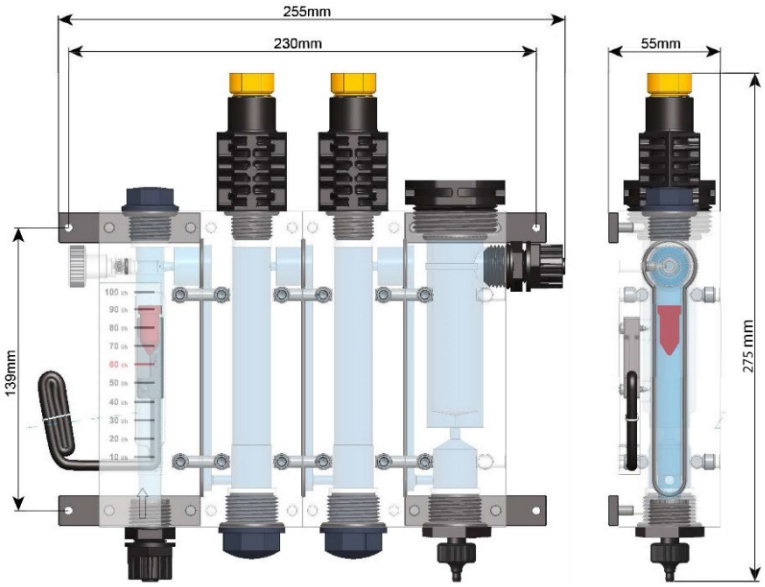

Flow switch + 2 12mm Modules
+ 1 24mm Module

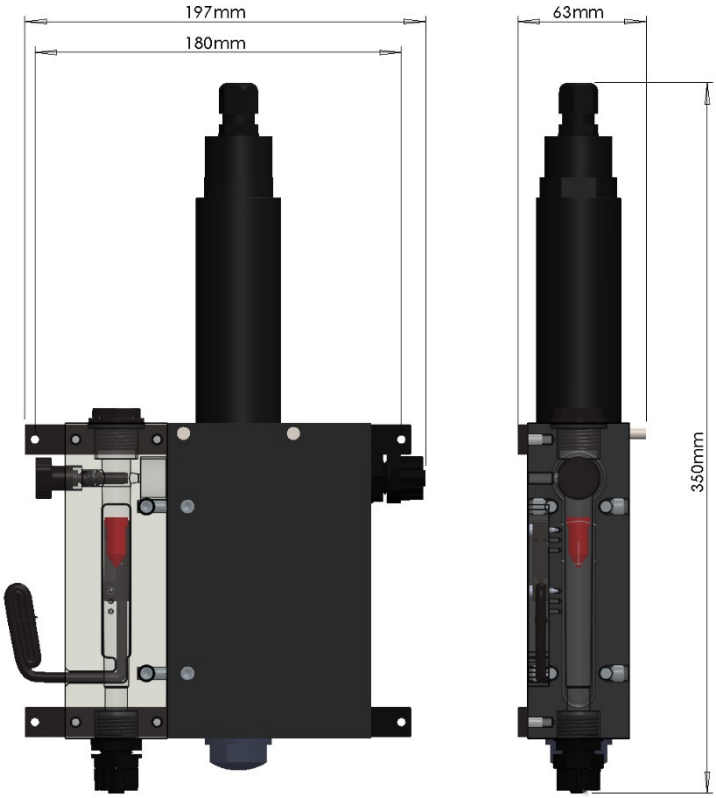

Flow switch + Turbidity

More combinations available on request