Chemitec
WATER MONITORING SOLUTIONS

SENSORS & CONTROLLERS

ANALYZERS & SAMPLERS

LEVEL, FLOW & PRESSURE

WEB APP & DATALOGGING

ACCESSORIES

PSS8 DATASHEET

HOUSING SENSOR HOLDER

MAIN FEATURES

PSS8 is a versatile probeholder for bypass probe inserting. The probeholder can contain almost all the Chemitec probes, i.e. pH or ORP electrodes, Conductivity, Oxygen and Turbidity/S.S. probes. The probeholder can be wall mounted.

APPLICATIONS

- Waste Water
- Drinking Water
- Cooling Towers
- Reverse Osmosis
- Irrigation

CHEMITEC S.R.L.
VIA I.NEWTON, 28 50018 SCANDICCI (FI)- ITALY
+39 0557576801 • sales@chemitec.it • www.chemitec.it

TECHNICAL DATA

Head Material	PP Black
Glass material	PMMA transparent PP Black
Pressure range	Max 2 bar
Probe connection	= PG 13,5mm, 42 mm, 35 mm, 24 mm.
Inlet/Outlet	8x12 mm (tube)
pH range chemical compatibility	4,0÷10 pH transparent body 2,7÷12 pH black body

DIMENSIONS

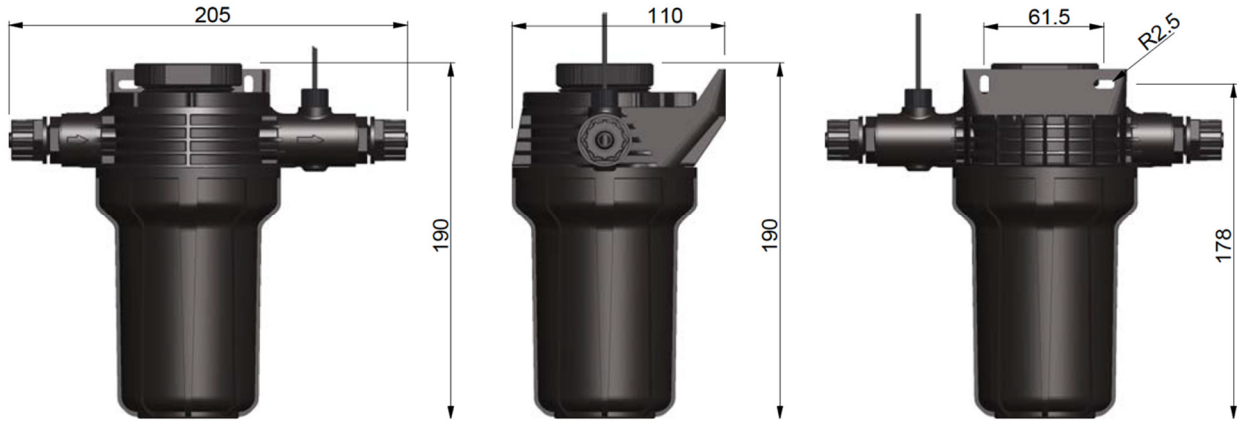

ORDER CODES

9900103087	PSS 8-A for three probes (Ø12 mm)
9900103088	PSS 8-A1 for three probes (Ø12 mm)
9900103086	PSS 8-B1 for one probe (Ø35 or 42 mm)
9900103089	PSS 8-C for one probe (Ø24 mm)